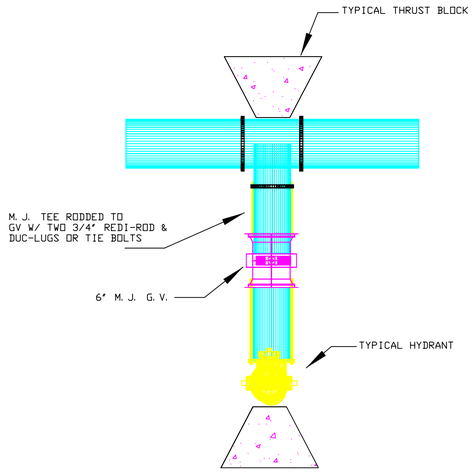

STANDARD HYDRANT DETAIL

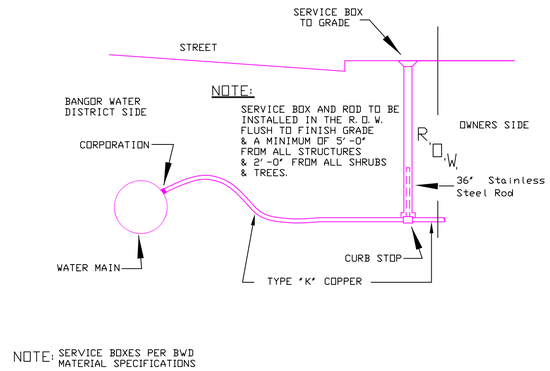

NOTE: SERVICE BOXES PER BWD MATERIAL SPECIFICATIONS

TYPICAL DOMESTIC SERVICE CONNECTION

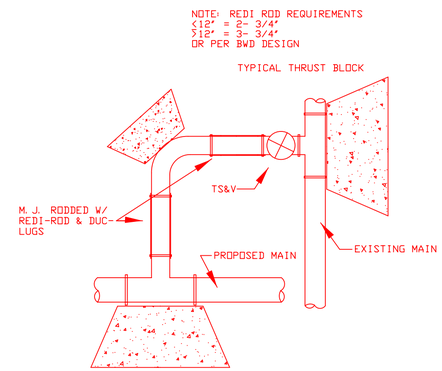

TYPICAL TIE-IN

OLD MAIN TO NEW MAIN WHEN SERVICE INTERRUPTION NOT DESIRED

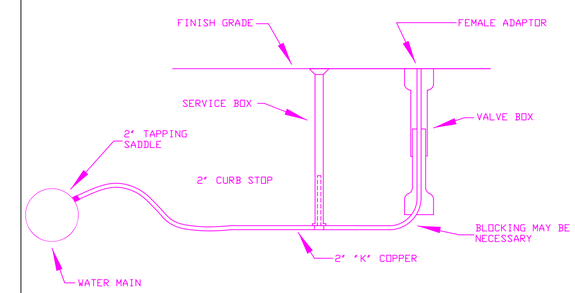

PERMANENT STYLE 2" BLOW-OFFS

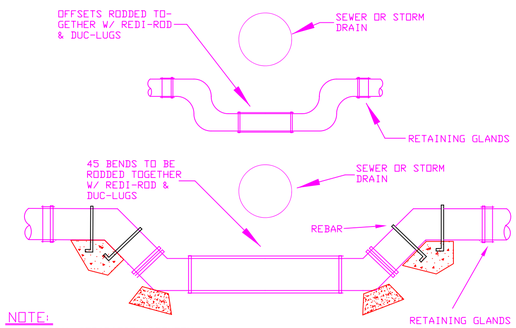

NOTE:
VERTICAL SEPARATION BETWEEN SEWER OR STORM DRAINS 18" MIN. HORIZONTAL SEPARATION BETWEEN SEWER OR STORM DRAINS 10'-0" MIN. ON MAINS AND 5'-0" SEPARATION ON SERVICES. ANY EXCEPTION TO THE ABOVE MUST BE AUTHORIZED BY THE BANGOR WATER DISTRICT.

NOTE: REDI ROD REQUIREMENTS
<12" = 2- 3/4"
>12" = 3- 3/4"
OR PER BWD DESIGN

OFFSETS

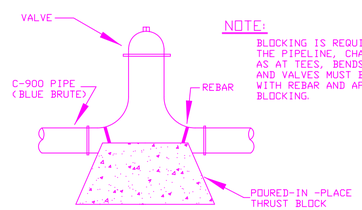

NOTE:
BLOCKING IS REQUIRED WHERE EVER THE PIPELINE, CHANGES DIRECTION AS AT TEES, BENDS ETC. FITTINGS AND VALVES MUST BE ANCHORED WITH REBAR AND APPROPRIATE SIZE BLOCKING.

RESTRAINING C-900 VALVES

TYPICAL USES

PIPE SIZES	6"	8"	12"	16"
90 BEND	A	B	B	C
45 BEND	A	A	A	B
22.5 BEND	A	A	A	A
END	A	A	A	B
TEE	A	A	A	B

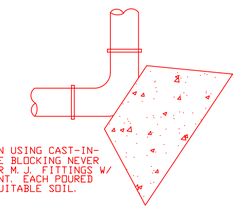

NOTE:
WHEN USING CAST-IN-PLACE BLOCKING NEVER COVER M. J. FITTINGS W/ CEMENT. EACH POURED TO SUITABLE SOIL.

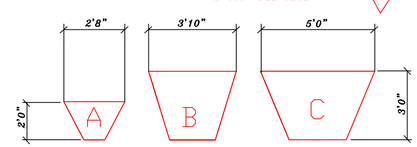

THRUST BLOCK SPECIFICATIONS

A=SMALL PRECAST (.22 YDS.) HT. = 24"
B=LARGE PRECAST (.97 YDS.) HT. = 36"
C=CAST-IN-PLACE (1.74 YDS.) HT. = 50"

NOTE:
VALVE BOXES FOR WATER MAINS AND SERVICES SHALL BE AT LEAST 5'0" FROM ALL STRUCTURES AND AT LEAST 2'0" FROM ALL SHRUBS AND TREES.
WATER MAINS AND SERVICES SHALL HAVE A MINIMUM OF 10'0" SEPERATION FROM ALL STRUCTURES INCLUDING VAULTS AND SEPTIC TANKS.
THE DISTRICT SHALL INSPECT ALL UNDERGROUND SERVICE INSTALLATIONS INCLUDING RENEWALS PRIOR TO BACKFILLING.

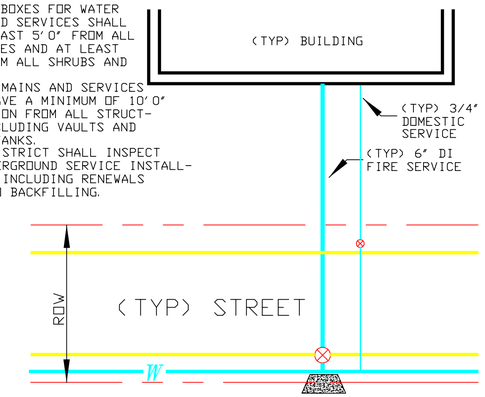

TYPICAL DOMESTIC/FIRE SERVICE

BANGOR WATER DISTRICT
614 STATE ST.
BANGOR, MAINE

DRAWN BY: B.L.
DATE: 3-24-92
SCALE: NTS

STANDARD DETAILS

SHEET 1 OF 2

SD1.DWG